Approved for Release: 2019/07/30 C06408441

~~SECRET~~

3.3(h)(2)
3.5(c)

WORKING PAPER

A PROGRAM FOR PROVIDING HIGH-RESOLUTION OBLIQUE PHOTOGRAPHY OVER DENIED AREAS

~~SECRET~~

Approved for Release: 2019/07/30 C06408441

Approved for Release: 2019/07/30 C06408441

SECRET

ABSTRACT

The Office of Research and Development with support from the Office of Technical Service and the National Photographic Interpretation Center has demonstrated the ability of homing pigeons to carry a small 16mm camera capable of obtaining high-resolution photography from over-flights. Furthermore, homing pigeons have successfully been taught to relocate to a new home. It is, therefore, feasible to relocate homing pigeons [redacted] for subsequent use to obtain timely photography of denied areas. The effort described here provides a program for the selection of birds, performance documentation, user training and involvement, and the demonstration of a simulated mission in the Washington, D.C., area in April of 1977.

PROGRAM OUTLINE

It is well known that homing pigeons will fly many hundreds of miles, often under adverse weather conditions, to return to their home lofts. Recent research by ORD has demonstrated the homing pigeon's ability to carry a sophisticated 16mm camera capable of taking high-resolution oblique photography. The purpose of the effort described here is to provide a scientific program for:

a. Selection of high-quality pigeons;

b. Training and documentation;

c. Testing of performance and flight path prediction accuracy;

SECRET

Approved for Release: 2019/07/30 C06408441

Approved for Release: 2019/07/30 C06408441

d. Involvement and training of potential user;

e. Simulated missions in the Washington, D.C., area.

As seen in Figure 1, suppliers will provide birds to be sent to the OTS facility [redacted] These will be high-quality birds selected for homing and weight-carrying ability. [redacted] extensive training and flight path accuracy tests will be conducted with user involvement and evaluation. Selected birds will then be [redacted] by the user to Washington, D.C., to undergo simulated mission tests prior to being taken to operational sites. It is also seen in Figure 1 that a test at Anchorage, Alaska, is planned in order to measure changes in performance that may occur in transport to extreme northern latitudes (i.e., the Soviet Union).

As seen in Figure 2, there are three basic suppliers with controlled lofts in [redacted] The suppliers will obtain birds from various locations from Florida to Alaska, and some relocation testing will be conducted by trading birds between the controlled lofts prior to shipment [redacted] Figure 3 shows the scale of miles [redacted] Overflight accuracy tests will be conducted using small DF transmitters on the birds and DF receivers located at various points along the flight path home. A light aircraft will also be fitted with a DF

Approved for Release: 2019/07/30 C06408441

Approved for Release: 2019/07/30 C06408441

SECRET

Figure 1: Program Outline

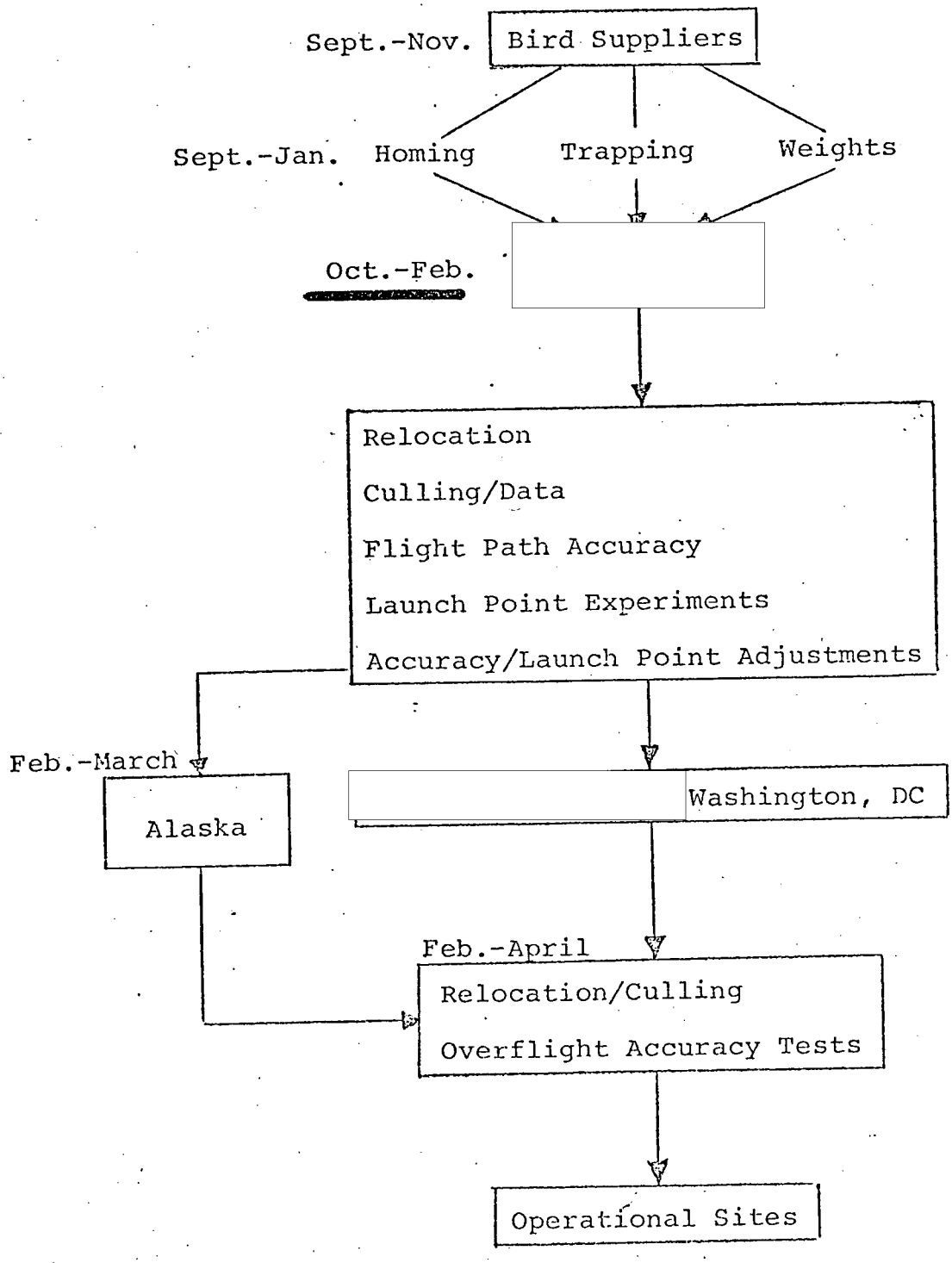

SECRET

Approved for Release: 2019/07/30 C06408441

Approved for Release: 2019/07/30 C06408441

SECRET

Figure 2: Suppliers

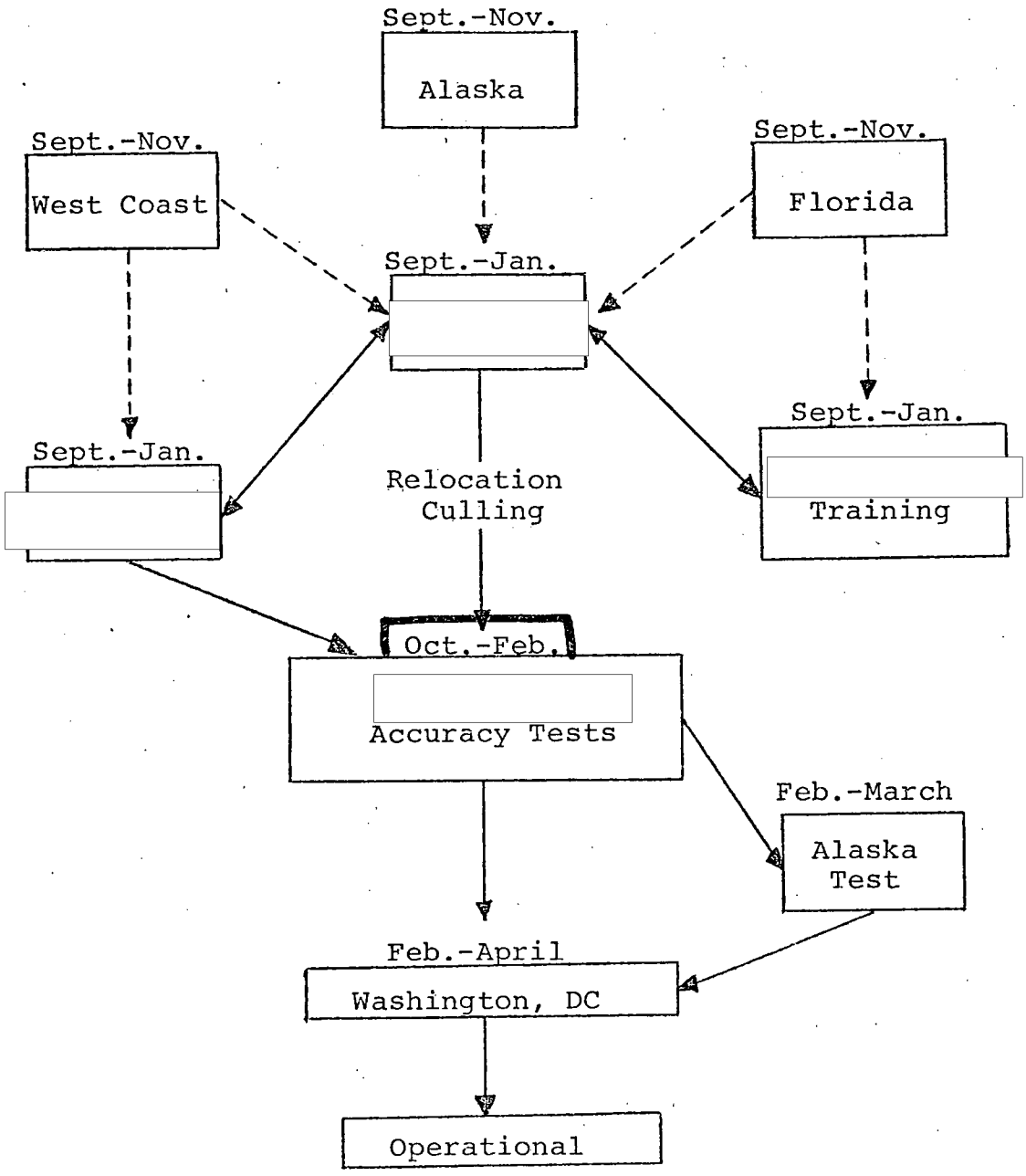

*Controlled Lofts

SECRET

Approved for Release: 2019/07/30 C06408441

Approved for Release: 2019/07/30 C06408441

~~SECRET~~

~~SECRET~~

Approved for Release: 2019/07/30 C06408441

Approved for Release: 2019/07/30 C06408441

receiver to assist in flight path measurements. Bird-carried cameras will also be used to establish flight paths in some cases. Figure 4 shows the loft location [redacted] A command post on top of the lab tower will provide communication for coordinating the field tests.

Table 1 shows the expected transitional quarter costs ($108,000), and Table 2 shows the expected costs for FY-77 as $135,000 of which $70,000 is for ORD and $65,000 is for OTS. Neither office has currently budgeted for these FY-77 costs.

OTS SUPPORT

During the T.Q. two basic activities will take place: A pigeon loft and facilities will be constructed [redacted] ($3,000) $5000, and basic training for handlers will take place in [redacted] For FY-77, the first birds will arrive [redacted] in early October and will continue to arrive through February 1977. [redacted] will provide feeding and exercising of the birds twice daily on a seven-day-a-week basis plus homing flight training at least three times a week. Complete records will also be kept. It is felt that the number of birds at any one time could be as large as 100, and that two full-time handlers will be required to perform this service and to assist in flight path accuracy tests to measure performance. The [redacted] FY-77 costs, including the salary for two hired handlers, is estimated at $25,000.

OSR Rec'd

Approved for Release: 2019/07/30 C06408441

Approved for Release: 2019/07/30 C06408441

Approved for Release: 2019/07/30 C06408441

Approved for Release: 2019/07/30 C06408441

TABLE 1

ORD T.Q. CONTRACT COSTS

CONTRACTOR	ITEM COST $	SUB TOTAL	RUNNING TOTAL
[redacted]			
Materials & Supplies (Bird Lofts/Training)	500		
Purchase of Birds	3,000		
Aircraft Rental $15/hr (100 hrs.)	1,500		
Labor	3,000		
Travel	2,000	10,000	10,000
[redacted]			
5 Cameras at $2,000 each	10,000		
Purchase of Birds	3,000		
Labor and Repair	7,000		
Travel and Field Support	5,000	25,000	35,000
[redacted]			
4 DF Receivers at $825 each	3,300		
Eight 1-gr. Transmitters at $50 each	400		
Three 6-gr. Transmitters at $65 each	200		
Commo Equipment for Field Tests	3,000		
Refit of Aircraft	1,600		
Labor	4,500		
Travel	3,000	16,000	51,000

(continued)

Approved for Release: 2019/07/30 C06408441

Approved for Release: 2019/07/30 C06408441

~~SECRET~~

TABLE 1 (CONTINUED)

ORD T.Q. CONTRACT COSTS

CONTRACTOR	ITEM COST $	SUB TOTAL	RUNNING TOTAL
[redacted]			
Drawings & Doc. (New Camera)	4,000		
Purchase Birds [redacted] & West Coast)	4,000		
Labor	7,000		
Travel	5,000	20,000	71,000
[redacted]			
QRC Support	4,000	4,000	4,000
[redacted]			
Building Supplies	2,300		
Labor	700	3,000	78,000
[redacted]			
Specialized Relocation Training		30,000	108,000

already committed
need not be
restated.

[redacted] OAI

KH-8 Targets on hand.

[redacted] to sign reports Oxon.

Tuesday

~~SECRET~~

Approved for Release: 2019/07/30 C06408441

Approved for Release: 2019/07/30 C06408441

SECRET

TABLE 2 A

ORD FY-77 CONTRACT COSTS

CONTRACTOR	ITEM COST $	SUB TOTAL	RUNNING TOTAL
[redacted]			
Building Supplies	500		
Feed	500		
Two Bird Handlers	21,000		
Transport, Shipping, Misc.	1,000		
Labor	1,000		
Boat Rental	1,000	25,000	25,000
[redacted]			
QRC Support	38,000	38,000	63,000
ELMENDORF AFB (ALASKA)			
Building Supplies	1,000		
Labor	4,000		
Gen. Support	2,000	7,000	70,000

SECRET

Approved for Release: 2019/07/30 C06408441

Approved for Release: 2019/07/30 C06408441

SECRET

TABLE 2 B

OTS FY-77 ESTIMATED COSTS

CONTRACTOR	ITEM COST $	SUB TOTAL	RUNNING TOTAL
[redacted] – 10 + 20? Two stage effort??			
30 Cameras ($2,000 each)	60,000	60,000	60,000
Construction of Lofts and D.C. Test Support	5,000	5,000	65,000
	TOTAL FY-77 COSTS		$ 135,000

SECRET

Approved for Release: 2019/07/30 C06408441

Approved for Release: 2019/07/30 C06408441

Four OTS personnel, capable of conducting operational missions, will be given preliminary training [redacted] (about one week) and participate in (or direct) at least three or four simulated mission tests [redacted] These personnel will also require training in handling and loading of the camera equipment. Five prototype cameras will be provided by ORD for design verification and initial tests [redacted] OTS should provide a total of 30 cameras (at an estimated cost of $60,000) to support the majority of tests at [redacted] Washington, D.C., and the first operational mission.

OTS will assess the operational quality of tests at [redacted] and provide [redacted] to the Washington, D.C., area. OTS will be responsible for conducting all tests in the Washington, D.C., area as well as the handling of birds and the maintenance of cameras. ORD will provide assistance, consultation, and analysis during the entire program. OTS may participate in (or direct) the test at Elmendorf AFB in Anchorage, Alaska, to verify performance at extreme northern latitudes.

Two OTS officers now at [redacted] [redacted] and [redacted] have been identified as having previous experience in handling birds.

Approved for Release: 2019/07/30 C06408441

Approved for Release: 2019/07/30 C06408441

PROGRAM MANAGEMENT

During the previous feasibility stage of this program, the voluntary involvement of NPIC provided technical evaluation and experimental direction which considerably improved the photographic product. It is strongly felt that this final phase of development will require the involvement of OSI, OWI, and SE as well as that of OTS, ORD, and NPIC in order to ensure a product of maximum intelligence value. It is recommended that the Technical Collection Team (TCT TACANA) be continued, and include [redacted] (NPIC), to properly advise and assess the efforts of the program manager (Dr. Charles Adkins) and the OTS team member during the course of this program. Figure 5 shows the recommended program management structure.

As a matter of policy, humane disposition of all culled birds will be observed at each of the controlled lofts. However, [redacted] for the bird loft [redacted] and the use of birds in the tests at Elmendorf AFB in Anchorage, Alaska. It is expected that some assistance will be required for the initial contact, [redacted] and arrangements with Elmendorf AFB.

3.3(h)(2)

Approved for Release: 2019/07/30 C06408441

Approved for Release: 2019/07/30 C06408441

SECRET

Figure 5: Program Management Structure

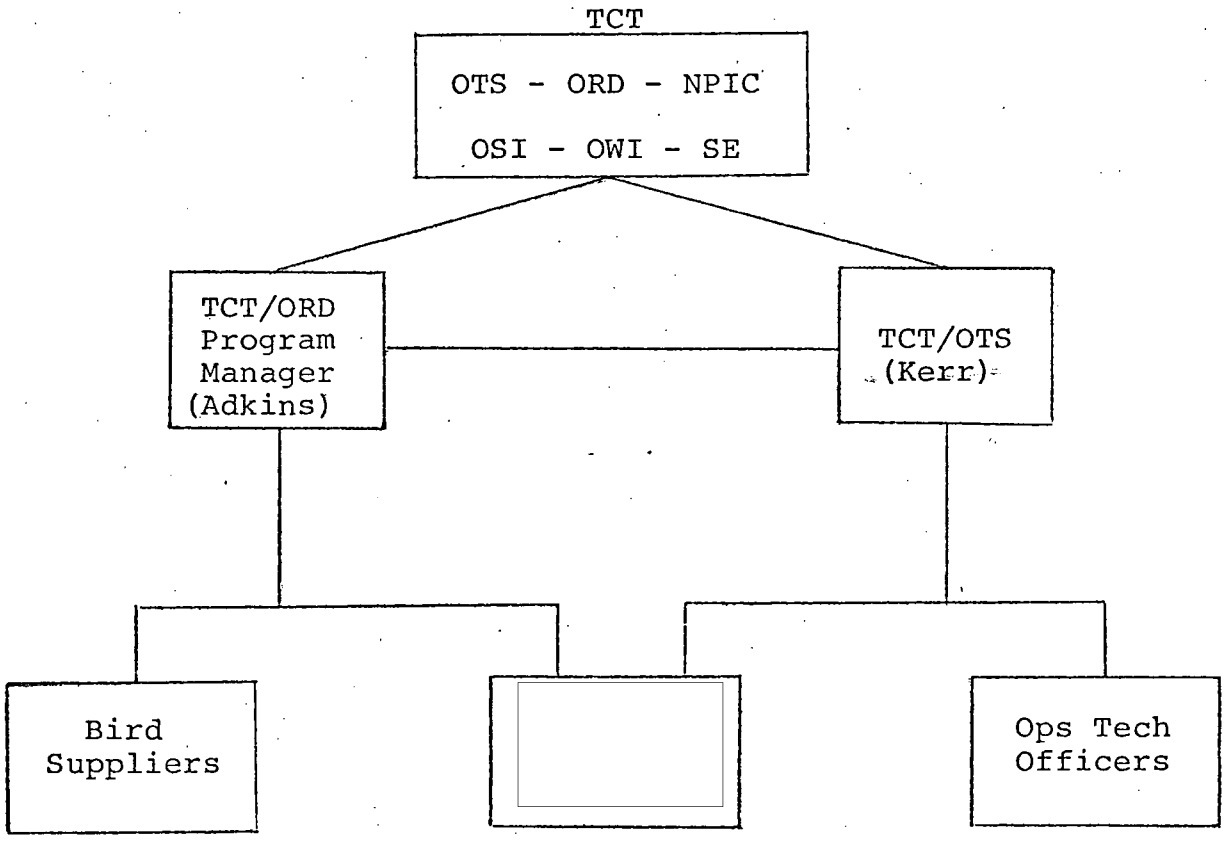

SECRET

Approved for Release: 2019/07/30 C06408441

Approved for Release: 2019/07/30 C06408441

OSR SUPPORT

A computer search was performed by the personnel office to locate Agency employees familiar with homing pigeons. A [redacted] was found who works in the publications Branch of OSR. His supervisor is [redacted] Chief, Publications Staff. [redacted] was interviewed, with [redacted]s permission, and was found to be quite knowledgeable in the raising and training of homing pigeons. A summary of his experience is enclosed. [redacted] was quite enthusiastic about participating in the program on a full-time basis. I suggest that Mr. Noel E. Firth, Director, OSR, be approached to consider the temporary reassignment of [redacted] to this program for the period of one year. [redacted] could be responsible for the loft designs, the training of bird handlers and operational personnel, and could supervise the selection and training of birds. [redacted] contribution to this program will be invaluable.

Approved for Release: 2019/07/30 C06408441

Approved for Release: 2019/07/30 C06408441

~~SECRET~~

Approved for Release: 2019/07/30 C06408441