Approved for Release: 2019/07/30 C06636807

3.3(h)(2)

6.2(d)

Executive Registry
68-1290

DD/ST# 921-68

ORD 1322-68

11 MAR 1968

MEMORANDUM FOR: Executive Director-Comptroller

SUBJECT: CHIROLOGY - Marine Mammal Program

1. The purpose of this memorandum is to provide you with a current status report on the CHIROLOGY (formerly OXYGAS) program and to request additional FY 1968 funds.

2. The objective of the CHIROLOGY program is to develop a prototype system for interdicting marine logistics support in a non-attributable way. Although this objective is specifically aimed toward DOD use, the subsystems will provide CIA with a capability to achieve intelligence objectives originally established under the OXYGAS project.

3. Program plan. The overall direction of CHIROLOGY is the responsibility of a steering panel which includes Mr. Richard Cesaro of ARPA, Mr. Everett Greinke of DD/R&E, Mr. Harris Stone of U.S. Navy OP-07 and Dr. Stephen Aldrich of CIA. The technical direction of the program is the responsibility of [redacted] Chief, Biological Sciences Division/ORD. Demonstration of an operational prototype system is planned on or about 1 April 1969, twelve months after initiation of contracts. A general breakdown of the timing and costs of the program are attached.

4. Agency relationships and objectives. As a consequence of our previous discussion on 27 December 1967, we intend to:

a. prove or disprove the feasibility of this system in the shortest time possible;

b. maintain maximum control in terms of Agency objectives; and

c. achieve this at the least possible cost to the Agency.

Approved for Release: 2019/07/30 C06636807

Approved for Release: 2019/07/30 C06636807

Toward these objectives, we have established security control of the program, funded the first six months of the animal training program, provided the support boat and crew (Special Operations Division/DDP), and have authority from ARPA to act as the technical program manager for this program. In order to take advantage of Navy resources, we are terminating the current host-tenant agreement through the Office of Naval Research to the Key West Naval Base and are implementing a memorandum of understanding with OP-07 of the Navy which, in effect, provides us with broader access to Navy resources and manpower and transfers the cost of this aspect of the program to Navy and ARPA.

5. Current Funding Problem. In order to comply with a DOD desire to have a systems integrator for the program and to accelerate the program, an increase in project funding is required from DOD and the Agency. ARPA will be able to provide only approximately $350K in FY-1968 for the initiation of the systems integration. These funds must be supplemented by $200K from the Agency for the payload and guidance subsystems and $150K to extend the contract with the animal trainers. ARPA's contribution in FY-1969 to complete the integration and to complete the payload and guidance subsystems could go as high as $650K, depending upon a negotiated price of the systems integration, guidance and payload contracts. However, at this time ARPA can program only $450K in FY-1969. It is my recommendation that the Office of Research and Development reprogram $150K to extend the contract with the animal trainers and that additional Agency funds in the amount of $200K be allocated to ORD immediately in order that the payload and guidance subsystems may be initiated. By following this course of action, we will reduce the overall Agency commitment in terms of dollars (none are currently programmed for FY-1969) and will maximize our control at an early stage. Another option would be to delay the development of the payload and guidance systems until FY-1969. I believe this option would delay completion of the program by a minimum of four months and would, in the long run, require greater funding on the part of the Agency.

6. It is requested that we be permitted to proceed with the management of this program as outlined above and that the additional

Approved for Release: 2019/07/30 C06636807

Approved for Release: 2019/07/30 C06636807

SECRET

ORD 1322-68

SUBJECT: CHIRIOLOGY - Marine Mammal Program

200 K of FY 1968 funds be made available in support of this program. Agency funding in FY 1969, other than that provided by SOD/DD/P ($100 K), is not required in the present project plan. I will be happy to discuss any aspect of this program with you if you so desire.

[redacted]

Stephen L. Aldrich, M. D.
Deputy Director
of
Research and Development

CONCUR:

[redacted]

Deputy Director for Science and Technology — Date

APPROVED: Additional $200,000 will be made available from the over-all DDS&T allocation.
/s/ E. K. White

Executive Director-Comptroller — Date 2 APR 1968

Attachments
A. Management Organization
B. Funding Chart
C. Program Development and Milestones

Distribution:
Orig & 1 - Addressee
1 - DD/S&T Registry
1 - TA/DD/ORD
1 - C/BSD
1 - DD File
1 - DD Chrono
1 - ORD Registry

ORD:SLAdrich:pjk/2652 (4 March 1968)
(Re-typed: O/DDS&T/Compt/[redacted]ldj/4020 (11 Mar 68)

SECRET

Approved for Release: 2019/07/30 C06636807

Approved for Release: 2019/07/30 C06636807

SECRET

FUNCTIONAL ORGANIZATION CHIROLOGY

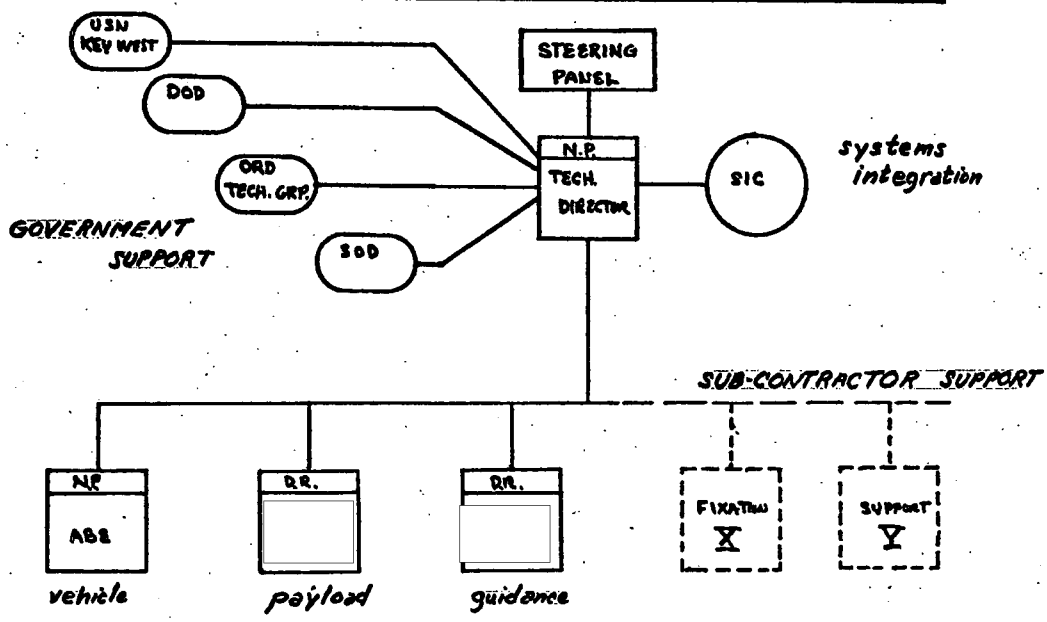

SECRET

Approved for Release: 2019/07/30 C06636807

Approved for Release: 2019/07/30 C06636807

CHIROLOGY FUNDING

	FY 1968	FY 1969
SOD/DD/P (Maritime Support)	100 K CIA	100 K+ CIA
Animal Training and Support (200 K/year)	100 K CIA (6 mo.) 150 K CIA (9 mo.)	
Systems Integration (550 K/year)	350 K ARPA	200 K ARPA
[1]Payload (350 K/year)	100 K CIA	250 K ARPA
[2]Guidance (300 K/year)	100 K CIA	200 K ARPA
Support (ARPA, Navy)	GFE	GFE
Totals	900 K	750 K
ARPA	350 K	650 K
CIA	550 K	100 K

[1]This includes design and fabrication of the emplacement package, development of suitable non-explosive materials and ship fixation techniques.
[2]This includes tracking, navigation and communication with the animal and his payload.

Funded FY 1968
To be reprogrammed in ORD FY 1968
Required from FY 1968 year-end funds

Approved for Release: 2019/07/30 C06636807

Approved for Release: 2019/07/30 C06636807

SECRET

TENTATIVE GANTT CHART - CHIROLOGY

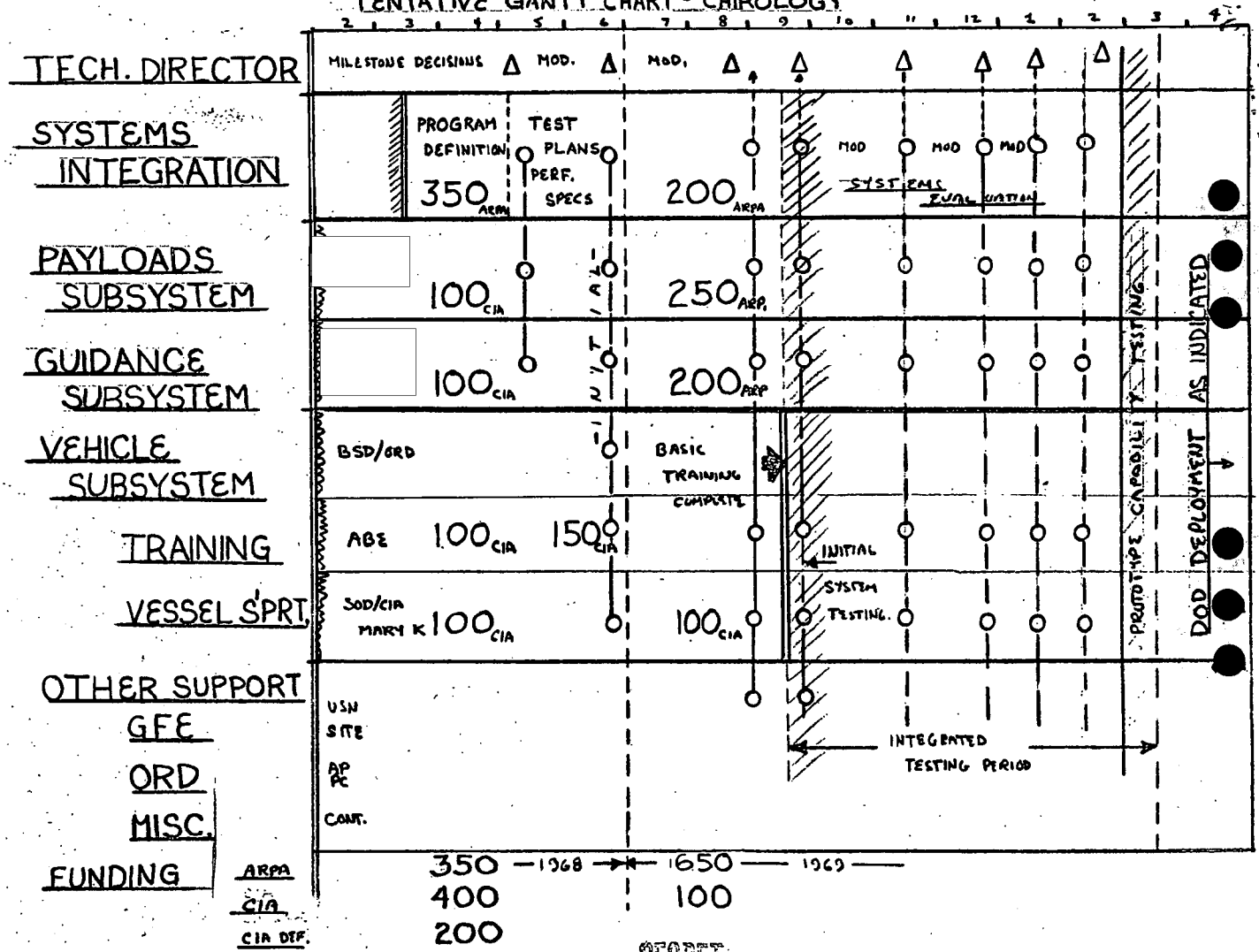

SECRET

2

Approved for Release: 2019/07/30 C06636807