Approved for Release: 2019/07/30 C06527521

3.3(h)(2)

6.2(d)

ORD-0008-76

5 January 1976

MEMORANDUM FOR THE RECORD

SUBJECT: TCT Activities Regarding Bird Camera

1. This memorandum covers the period between 16 December 1975 and 5 January 1976 regarding the progress for developing and testing a bird camera. Requirements and program scheduling have been completed for the ultimate test at the [redacted] in late April 1976. A TCT meeting was held in mid-December during which activities in the 16 December memorandum were discussed with the team members. Also, the bird camera development schedule (attached) was discussed. At this meeting, the probable resolution on the ground was estimated to be about 1-1/2 to 2 inches per 100 feet of altitude, and it was further estimated that the bird would fly at an altitude of about 100 feet. [redacted] of MSD/IAS was asked if this was adequate resolution for gathering meaningful intelligence. His estimate at that time was that it probably was adequate but he would study the problem in some detail and let me know if it was not. At this time, I have received no communication from [redacted] The issue of vertical versus oblique angle for taking pictures was discussed, but no firm decision was made except that vertical is probably as good as any since the right and left edges of the picture will be about 30 degrees off the centerline even if the camera were pointed straight down.

2. Film has been ordered and received from Kodak. This is a special high-resolution thin-based film designated as 3400 and 3414. The film slicer has been obtained from OTS; and a $5,000 work order has been established [redacted] for the purpose of using their photographic laboratory to slice film and process test samples of resolution charts, etc., for determining resolution and calibrating blurring due to linear motion of the camera. During the week of 5 January, several rolls of

E2 IMPDET
CL BY [redacted]

Approved for Release: 2019/07/30 C06527521

Approved for Release: 2019/07/30 C06527521

SUBJECT: TCT Activities Regarding Bird Camera

film will be sliced to 16 mm format and will be taken to [redacted] for test by [redacted] next week in the initial prototype camera. Following these tests, the camera will be brought back here for subsequent tests, probably during the early part of the week beginning 19 January.

3. A new harness for the camera has been designed out of a thin Mylar film weighing approximately 1/2 gram as opposed to the previous 4-1/2 gram harness weight. Two pigeons have been purchased and fitted with the new harness and a mock-up of the new camera. A prototype harness and dummy camera were sent [redacted] on 29 December. This mock-up system is being flight tested now on pigeons [redacted] Resolution charts have been ordered and should be here by the end of this week. Three Midland transceivers have been obtained and checked out for use in the prototype flight tests at the end of this month. In addition, portable audio recording equipment has been collected and checked out for use in the field during these same tests.

4. Dimensions for the Radome target to be used for the ultimate tests [redacted] in April were found to be as follows:

a. Sphere is [redacted] in diameter;

b. A truncated base [redacted] in diameter;

c. A height between the base and the top of the sphere of [redacted]

A portable test target for use [redacted] has been selected and was mailed to him on 26 December. This is a rubber balloon which inflates to a diameter of 20 feet in approximately 30 minutes. It comes with an air compressor at a total cost of approximately $500.

5. At this time, the camera development program is pretty much on schedule. It is estimated that preliminary flight tests on the West Coast will take place during the latter part of this month. The purpose of these tests

Approved for Release: 2019/07/30 C06527521

Approved for Release: 2019/07/30 C06527521

SUBJECT: TCT Activities Regarding Bird Camera

is to take pictures of Air Force resolution charts placed on the ground whereby preliminary estimates of resolution and motion blurring can be determined.

Charles N. Adkins
Operations Technology, ORD

Attachment:
Camera Development Schedule

Distribution:
0 - C/OTD then file w/att
1 - CEB/OTD Chrono w/o att
1 - OTD/ORD Chrono w/o att
1 - ORD Registry w/o att

OTD/ORD/DD/S&T/CNAdkins:kmc/2763

Approved for Release: 2019/07/30 C06527521

Approved for Release: 2019/07/30 C06527521

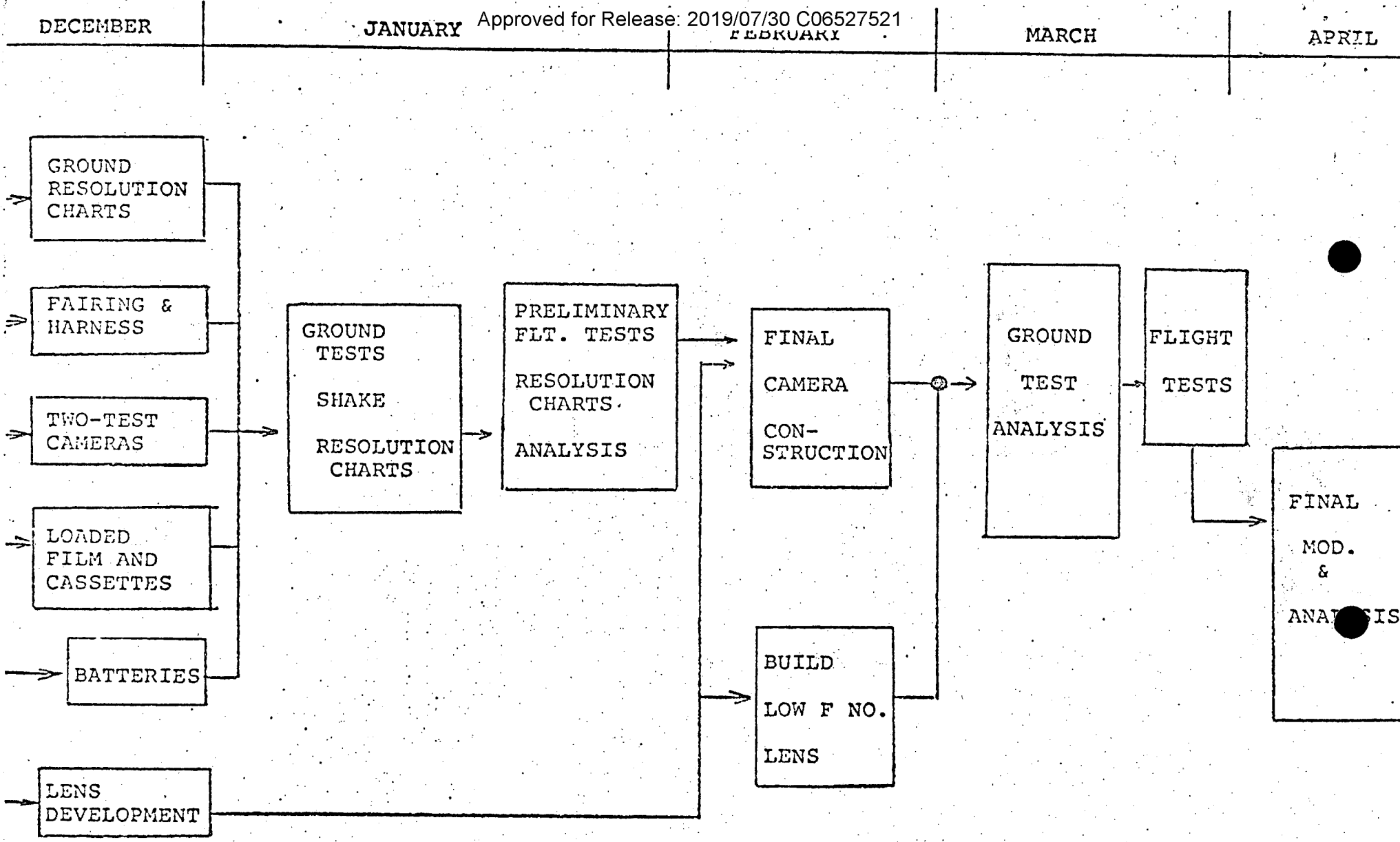

Approved for Release: 2019/07/30 C06527521